DIMENSIONS(Unit=mm)

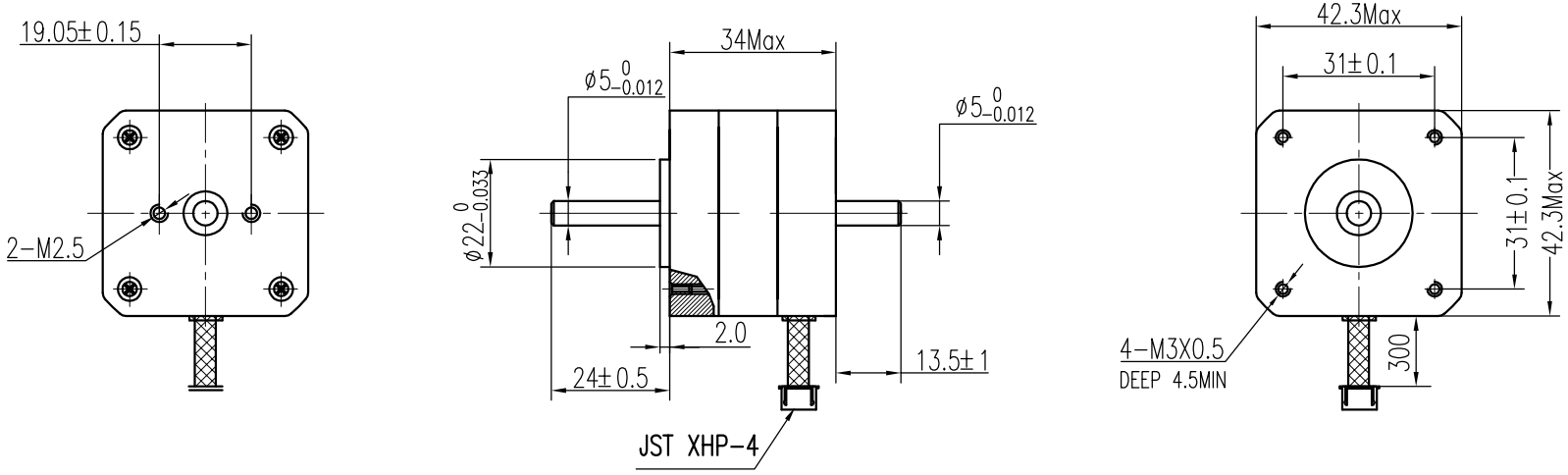

SPECIFICATIONS

			COMMENT
PHASE	2	PHASE	
STEP ANGLE	1.8	°/STEP	JST XHP-4
VOLTAGE	3.92	V	
CURRENT	1.4	A/PHASE	
RESISTANCE	2.8	ohm/PHASE	
INDUCTANCE	3.6	mH/PHASE	
HOLDING TORQUE	22	N.cm	
DETENT TORQUE	1.1	N.cm	
INSULATION	B		
LEAD STYLE	AWG26 UL1007		

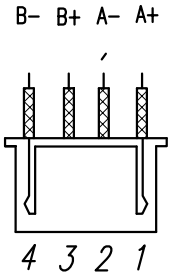

COLORS OF LEAD WIRES

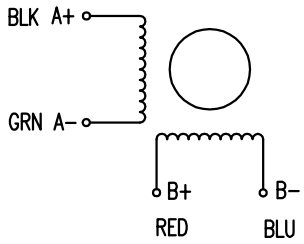

17 Hybrid Stepper

Arsisan

A3

Funpos